Diritti riservati All rights reserved

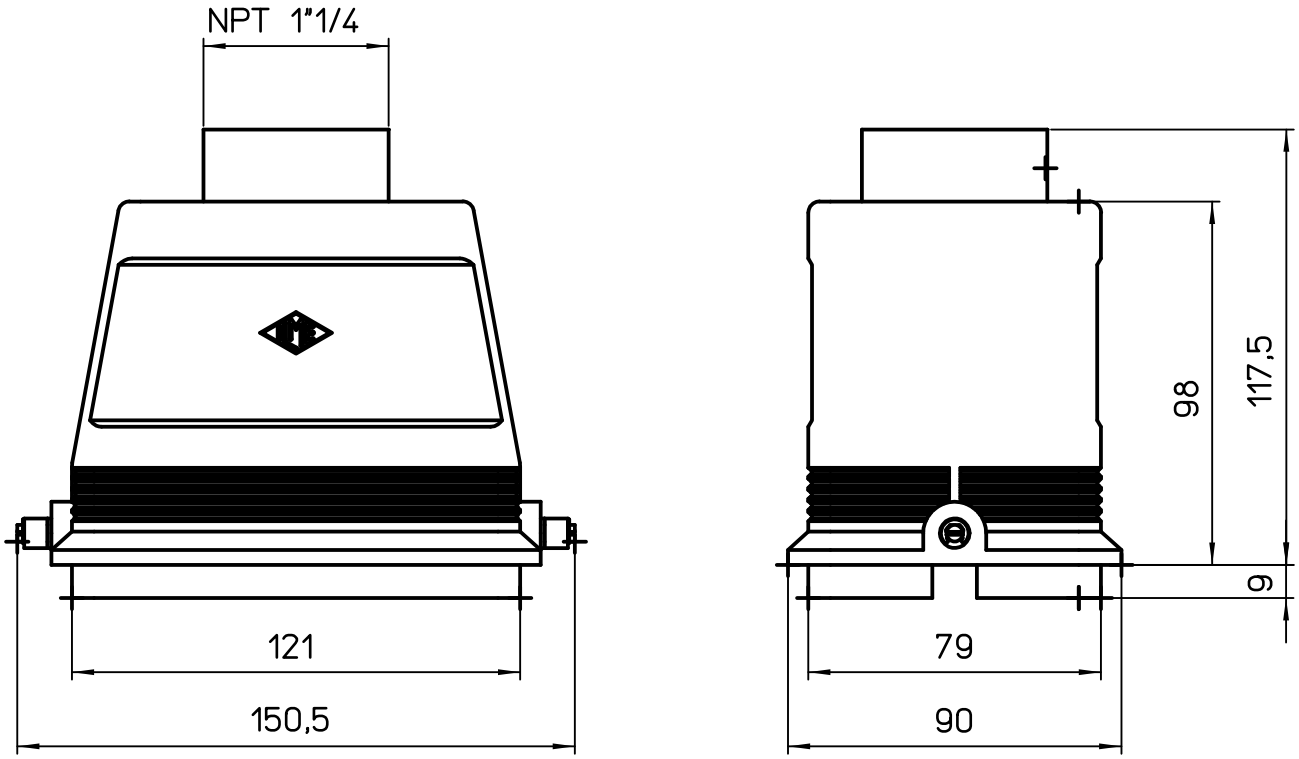

dimensions in mm	CHVT 48.7 L
Date 14/12/06	hood top entry NPT 1"1/4
Sign.	

Scale 1:2